Data sheet

Hydraulic data

Maximum operating pressure *PN*	10 bar
Head max H_{max}	10.7 m
Flow max Q_{max}	34.7 m³/h
Minimum suction head at 50 °C *m*	5 m
Minimum suction head at 95 °C *m*	12 m
Minimum suction head at 110 °C	18 m
Min. fluid temperature T_{min}	-10 °C
Max. fluid temperature T_{max}	90 °C
Min. ambient temperature T_{min}	-10 °C
Max. ambient temperature T_{max}	40 °C

Motor data

Energy efficiency index (EEI)	≤0.17
Mains connection	1~230 V ±10%, 50/60 Hz
Min current I_{min}	0.2 A
Max current I_{max}	2.4 A
Rated power P_2	456 W
Min. speed n_{min}	650 1/min
Max. speed n_{max}	3050 1/min
Power consumption $P_{1\ min}$	10 W
Power consumption $P_{1\ max}$	550 W
Emitted interference	EN 61800-3;2004+A1;2012 /residential area (C1)
Interference resistance	EN 61800-3;2004+A1;2012 /industrial environment (C2)
Insulation class	F
Protection class	IPX4D
Threaded cable connection	5 x M16x1.5

Installation dimensions

Pipe connection on the suction side *DNs*	DN 50
Pipe connection on the discharge side *DNd*	DN 50
Port-to-port length *L0*	280 mm

Materials

Pump housing	Grey cast iron
Impeller	PPS-GF40
Shaft	1.4028, DLC-coated
Bearing	Carbon, antimony-impregnated

Equipment/function

Function

Control mode	Δp-v for variable differential pressure
	Δp-c for constant differential pressure
	Q limit for limiting the maximum volume flow
	Dynamic Adapt plus
	ΔT-const. for constant differential temperature control
	T-const. for constant temperature control
	Constant Q for constant volume flow control
	Multi Flow Adaptation
	Δ T-const. for constant differential temperature control
	User-defined PID control
	Constant speed (n-const.)
Special features of the series	Heating/Cooling switching
	Night set back
	Heat quantity measurement
	Cooling quantity measurement
	Key locking function
	No-Flow Stop
	Reset function to factory setting
	Adjustable volume flow limiter
	Ability to save and restore configured pump settings (3 restoration points)
	Fault message and warning message in plain text including suggested remedy
Multi pump operation	Main/Standby
	Parallel operation
Measurement value logging	Heat and cooling capacity measurement
Display	Setpoint
	Actual delivery head
	Actual volume flow
	Actual power consumption
	Energy consumption
	Temperature (version “-R7”: current fluid temperature possible with Stratos MAXO temperature sensor)
	Warning messages in plain text (display status: yellow)
	Error messages in plain text (display: red)
	Pump venting (display status: blue)
	Control mode
	Active influences (e.g. STOP)

Function

Display (can also be selected)	Speed
	Heating quantity
	Cooling quantity
	Operating hours
	Mains voltage
	Warning message
	Error message
Pump venting function	Yes

Equipment

Approvals and labels	CE
	VDE
	EAC
Cold water insulation shell	As accessories
Display	Graphic colour display (4.3 inches)
Display information	Comfort Version: LCD display (large) for showing the head, flow volume, actual und cumulated current.
Pump control	Electronic-controlled pump
Quick electrical connection	Wilo Connector
Thermal insulation shell	Yes
Blocking-current proof motor	yes
Particle filter	yes
Key lock	yes

Connectivity

Access via the Wilo-Assistant app	Yes
Analogue signal as standard	0-10 V 2-10 V 4-20 mA 0-20 mA PT1000
Bus communication via additional accessories	BACnet MS/TP LON Modbus RTU CANopen PLR BACnet IP Modbus TCP
Connection for Wilo-Smart Cloud	Via Wilo-Smart Gateway
Digital input	Ext. OFF Ext. MIN Ext. MAX MANUAL (BMS-OFF) Key lock Switchover between heating/cooling mode
Digital output	SSM SBM
wire data exchange and remote operation	Bluetooth

Pump curves

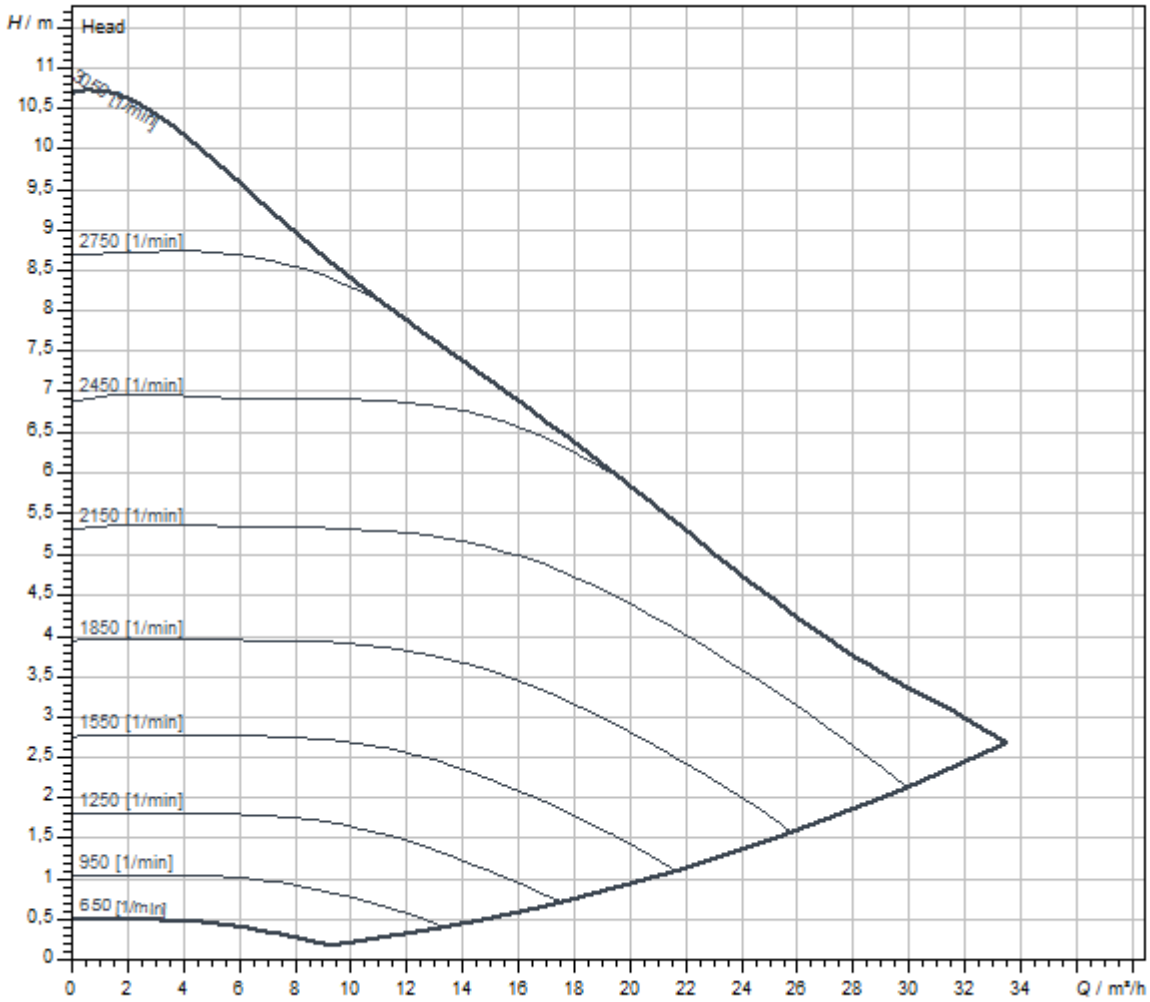

Fluid media	Water 100 %
Fluid temperature *T*	20,00 °C
speed at duty point *n hydr. @ OP*	2.400 1/min

Dimensions and dimensions drawings

Stratos MAXO 50/0,5-9 PN6/10-R7

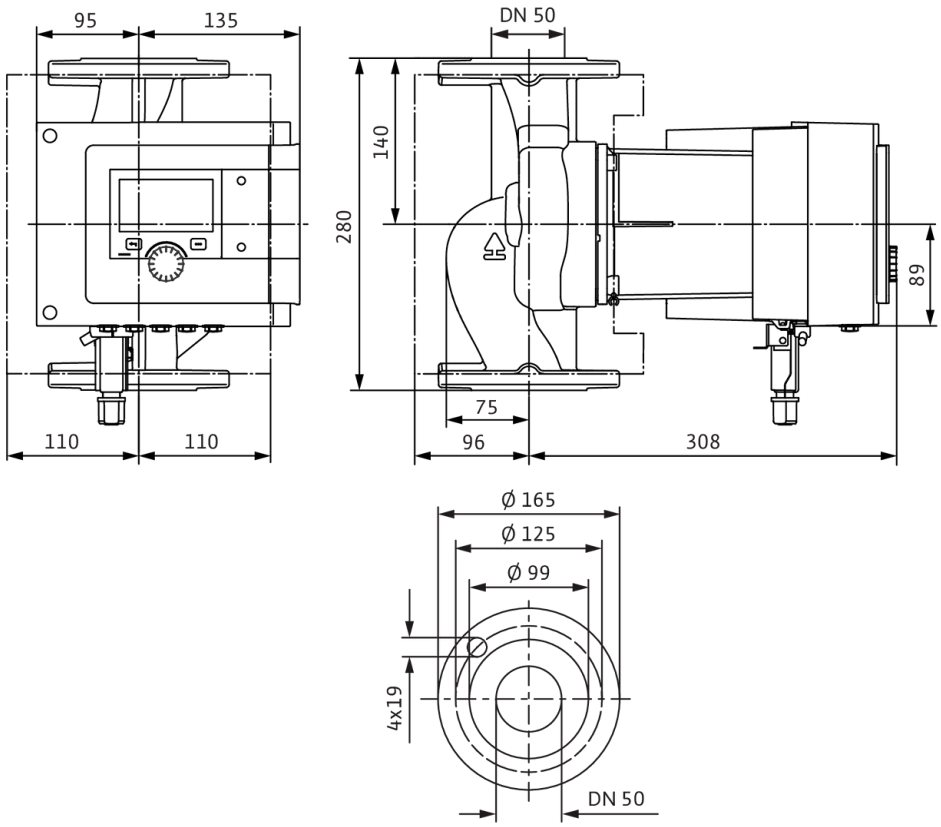

Wiring diagram

Standard: 1~ 230 V, 50/60 Hz, Option: 3~ 230 V, 50/60 Hz

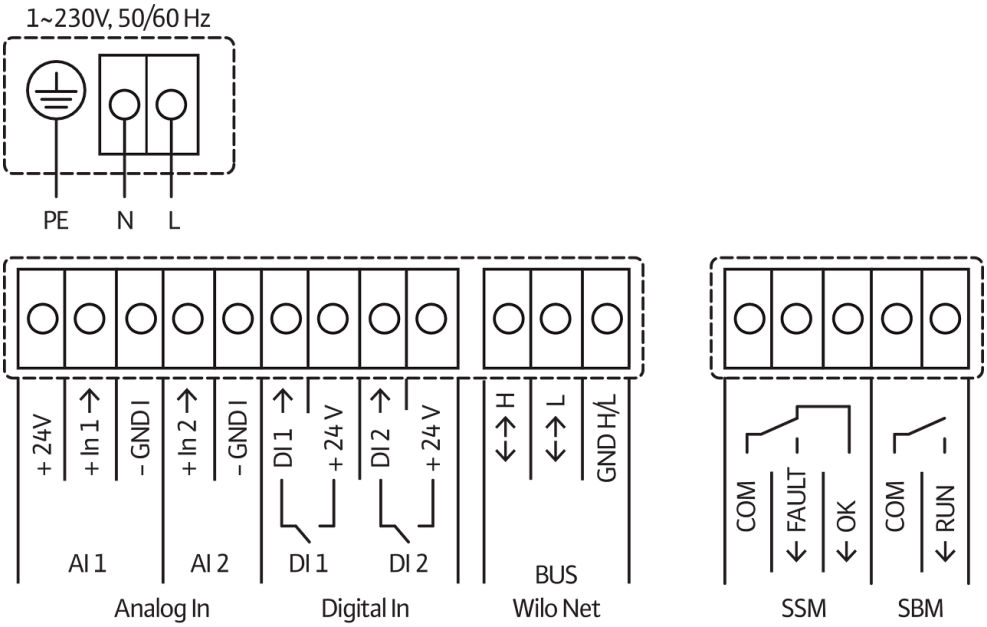

SSM: Collective fault signal (NC contact in accordance with VDI 3814, load capacity 1 A, 250 V ~)

Tender text

Premium smart-pump Wilo-Stratos MAXO-R7 (R7 = without internal temperature sensor)

High efficiency in-line glandless pump with EC motor and electronic power adjustment. Can be used for chilled water, heating water and water/glycol mixtures. Energy efficiency index (EEI) between ≤ 0.17 and ≤ 0.19 depending on pump type.

Control modes:

- Permanent, automatic performance adjustment according to system requirements without setpoint specification **Wilo Dynamic Adapt plus** (factory setting). Up to 20% energy savings compared to dp-v control mode.
- Constant temperature **(T-const.)**
- Constant differential temperature **(dT-const.)**
- Needs-based volume flow optimisation of the feeder pump through connectivity and communication between multiple pumps **(Multi-Flow Adaptation).**
- Constant volume flow **(Q-const.)**
- Differential pressure control (dp-c) to a remote point in the pipe network **(index circuit evaluator)**
- Constant differential pressure **(dp-c)**
- Variable differential pressure **(dp-v)** with the option to set the nominal duty point
- Constant speed **(n-const.)**
- User-defined **PID** control

Functions:

- Heat quantity measurement **(available with accessory Wilo fluid temperature sensor or analogue temperature sensors e.g. 2x PT1000)**
- Cooling quantity measurement **(available with accessory Wilo fluid temperature sensor or analogue temperature sensors e.g. 2x PT1000)**
- Pump automatically deactivates when no flow is detected **(No-Flow Stop)**
- Switchover between heating and cooling mode (automatic, external or manual) **(automatic, available with the accessory Wilo fluid temperature sensor)**
- Adjustable volume flow limiter using the Q-Limit function **($Q_{min.}$ and $Q_{max.}$)**
- Dual-pump operations: Efficiency-optimised **parallel operation** for dp-c and dp-v, main and standby operation
- Ability to save and restore configured pump settings **(3 restoration points)**
- **Fault and warning messages** shown in plain text with advice on resolving the issue
- **Pump venting function** for automatic venting of the rotor chamber
- Automatic night setback **(available with the accessory Wilo fluid temperature sensor)**
- Automatic **deblocking function** and integrated **full motor protection**
- **Dry-running detection**

Display:

- Control mode
- Setpoint
- Volume flow
- Temperature **(available with accessory Wilo fluid temperature sensor)**
- Power consumption
- Electric consumption
- Active influences (e.g. STOP, No-Flow Stop)

Version:

- **2** configurable **analogue inputs**: 0–10 V, 2–10 V, 0–20 mA, 4–20 mA and commercially available PT1000; +24 V DC power supply
- **2** configurable **digital inputs** (Ext. OFF, Ext. Min, Ext. Max, heating/cooling, manual override (uncoupled from building automation), operation lock (key lock and remote operation configuration protection))
- **2** configurable **signal relays** for **run signals and fault messages**
- **Slot for Wilo-CIF modules** with interfaces for building automation BA (optional accessories: CIF modules Modbus RTU, Modbus TCP, BACnet MS/TP, BACnet IP, LON, PLR, CANopen)
- Wilo Net as a Wilo system bus for communication between Wilo products, e.g. **Multi-Flow Adaptation**; dual-pump operation and Wilo-Smart Gateway
- Automatic **emergency operation** with definable pump speed for exceptional circumstances, e.g. bus communication or sensor value malfunction
- **Graphic colour display** (4.3 inches) with one-button manual operation
- Use the Wilo-Assistant app to read and set operating data and –among other things– set up a commissioning protocol through the Bluetooth interface (no further accessories required)
- Integrated **dual-pump management** (twin-head pumps are prewired) when using 2 single pumps as two-pump unit (connection via Wilo Net)
- Cable break detection when using an analogue signal (in connection with 2 – 10 V or 4 – 20 mA)
- Outdoor installation with weather protection possible in accordance with the installation and operating instructions
- Pre-set date and time
- Thermal insulation shell for heating applications

Operating Data

Min. fluid temperature T_{min}	-10 °C
Max. fluid temperature T_{max}	90 °C
Min. ambient temperature T_{min}	-10 °C
Max. ambient temperature T_{max}	40 °C
Maximum operating pressure *PN*	10 bar
Minimum suction head at 50 °C *m*	5 m
Minimum suction head at 95 °C *m*	12 m
Minimum suction head at 110 °C	18 m

Scope of delivery

- Pump
- Optimised Wilo-Connector the same for all sizes
- 2x threaded cable gland M16 x 1.5
- 2x gaskets for threaded connection
- Thermal insulation shell
- Installation and operating instructions

Optional accessories:

- ClimaForm cold insulation to avoid the formation of condensate
- CIF module: Modbus TCP, Modbus RTU, BACnet IP, BACnet MS/TP, LON, PLR, CANopen
- PT 1000 (B) pipe contact sensor (for domestic hot water)
- PT 1000 (AA) sensor for installation in immersion well
- Differential pressure sensor
- Wilo fluid temperature sensor (can be retrofitted for recording and displaying the fluid temperature, heat and cooling quantity and using the temperature-controlled control modes T-const., dT-const.)

Motor data

Energy efficiency index (EEI)	≤0.17
Emitted interference	EN 61800-3;2004+A1;2012 /residential area (C1)
Interference resistance	EN 61800-3;2004+A1;2012 /industrial environment (C2)
Mains connection	1~230 V, 50/60 Hz
Power consumption $P_{1\ max}$	550 W
Min. speed n_{min}	650 1/min
Max. speed n_{max}	3050 1/min
Protection class motor	IPX4D
Threaded cable connection	5 x M16x1.5

Materials

Pump housing	Grey cast iron
Impeller	PPS-GF40
Shaft	1.4028, DLC-coated
Bearing	Carbon, antimony-impregnated

Installation dimensions

Pipe connection on the suction side *DNs*	DN 50
Pipe connection on the discharge side *DNd*	DN 50
Port-to-port length *L0*	280 mm

Ordering information

Brand	Wilo
Product description	Stratos MAXO 50/0,5-9 PN6/10-R7
Net weight, approx. *m*	18.8 kg
Article number	**2217955**

Mechanical accessories

Cold insulation

ClimaForm Stratos MAXO

ClimaForm Stratos MAXO 50/0,5-9/12	2201737	EUR 234.-

Pipe installation

Counter flange kit

DN 50, PN 6 counter flange kit	2105580	EUR 64.-
DN 50, PN 10 counter flange kit	2105581	EUR 81.-

Pipe installation, adapter fitting

Intermediate flange connecting piece F

Intermediate flange pieces F 3, DN 50x20mm, PN 6	110623098	EUR 56.-
Intermediate flange pieces F 3, DN 50x20mm, PN 10/16	110623190	EUR 65.-
Intermediate flange pieces F 5, DN 50x35mm, PN 6	110623293	EUR 74.-
Intermediate flange pieces F 5, DN 50x35mm, PN 10/16	110623396	EUR 88.-
Intermediate flange pieces F 4, DN 50x30mm, PN 6	110681292	EUR 66.-
Intermediate flange pieces F 4, DN 50x30mm, PN 10/16	110681395	EUR 71.-
Intermediate flange pieces F 40, DN 50x160mm, PN 10/16	2101156	EUR 537.-
Intermediate flange pieces F 2, DN 50x10mm, PN 6	110787690	EUR 47.-
Intermediate flange pieces F 2, DN 50x10mm, PN 10/16	110791494	EUR 50.-

Electrical accessories

Pump control/accessories

Antenna GSM/GPRS

D-network dual-band antenna with 3 m cable	2533862	EUR 100.-
D-network tri-band antenna 10 m cable	2533863	EUR 385.-
D-network tri-band antenna 15 m cable	2533864	EUR 511.-
SMA/FME adapter	2545548	EUR 47.-

BMS base module

BMS base module	2533800	EUR 832.-

CC communication module BACnet

CC-communication module BACnet MS/TP (slave)	2537050	EUR 1,474.-
CC-communication module BACnet IP (slave)	2537051	EUR 1,630.-

Communication module CC

CC communication module	2533850	EUR 329.-

Communication module GSM

GSM module	2533861	EUR 1,390.-

Communication module GSM (SC)

Communication module GSM (SC)	2542216	EUR 498.-

Communication module LON

Communication module LON	2533868	EUR 2,519.-

Communication module LON (SC)

Communication module LON (SC)	2538243	EUR 793.-

Communication module ModBus

Communication module Modbus RTU	2533869	EUR 604.-

Communication module Profibus

Communication module Profibus DP	2533866	EUR 1,474.-

Connection cable control modules/signalling modules

Control modules connecting cable	2533790	EUR 211.-
Signalling modules connecting cable	2533890	EUR 211.-

DDG impulse selector

DDG impulse selector	2533770	EUR 603.-

Immersion sensor Pt 1000

Temperature sensor Pt 1000 B	2193421	EUR 24.-
Immersion temperature sensor Pt 1000 AA	2193422	EUR 24.-

Immersion sleeve

Immersion sleeve G ½, 45mm	2193423	EUR 22.-
Immersion sleeve G ½, 100mm	2193424	EUR 24.-

Outdoor temperature sensor Pt 100

Outdoor temperature sensor Pt 100	2533772	EUR 135.-

Pump signalling module

Signalling module pump 1-2	2533812	EUR 459.-
Signalling module pump 3-6	2533836	EUR 459.-

SC communication module BACnet

SC-communication module BACnet MS/TP (slave)	2538242	EUR 72.-
BACnet IP SC communication module	2553366	on request

SC-HVAC signal board

SC-HVAC signal board	2119646	on request

Signal converter retrofit kit

Signal converter 0-10 V / 0-20 mA	2534992	EUR 263.-

Temperature module

Temperature module for systems with 4-6 pumps	2533771	EUR 1,182.-
Temperature module for systems with 1-3 pumps	2534991	EUR 1,461.-

Pump control/Smart control system

SCe-HVAC system

SCe-HVAC system 1x10A-M-WM	2542281	on request
SCe-HVAC system 2x10A-M-WM	2542282	on request
SCe-HVAC system 3x10A-M-WM	2542283	on request

Pump control/interface module

CIF-Modules

CIF-Module BACnet MS/TP	2190367	EUR 217.-

CIF-Module Modbus RTU	2190368	EUR 217.-
CIF-Module CANopen	2190369	EUR 217.-
CIF-Module LON	2190370	EUR 217.-
CIF-Module PLR	2190371	EUR 217.-
CIF-Module Ethernet	2211408	EUR 539.-

Smart Gateway

Wilo-Smart Gateway	2197100	EUR 821.-

Differential pressure detection

DDG (4-20mA)

Wilo-DDG 10 Signal Trans.(4-20mA)2G VP.	2136454	EUR 363.-
Wilo-DDG 20 Signal Trans.(4-20mA)2G VP.	2136456	EUR 363.-
Wilo-DDG 40 Signal Trans.(4-20mA)2G VP.	2136458	EUR 363.-
Wilo-DDG 60 Signal Trans.(4-20mA)2G VP.	2136460	EUR 363.-
Wilo-DDG 100 Signal Trans.(4-20mA)	2211740	EUR 363.-

DDG power supply unit

DDG power supply unit	501865293	EUR 382.-

DDG transducer

DDG transducer	501771990	EUR 1,775.-

Plug

Angle plug

Mains angle plug – Stratos MAXO	2212505	on request